Extender cables for Backplane bus

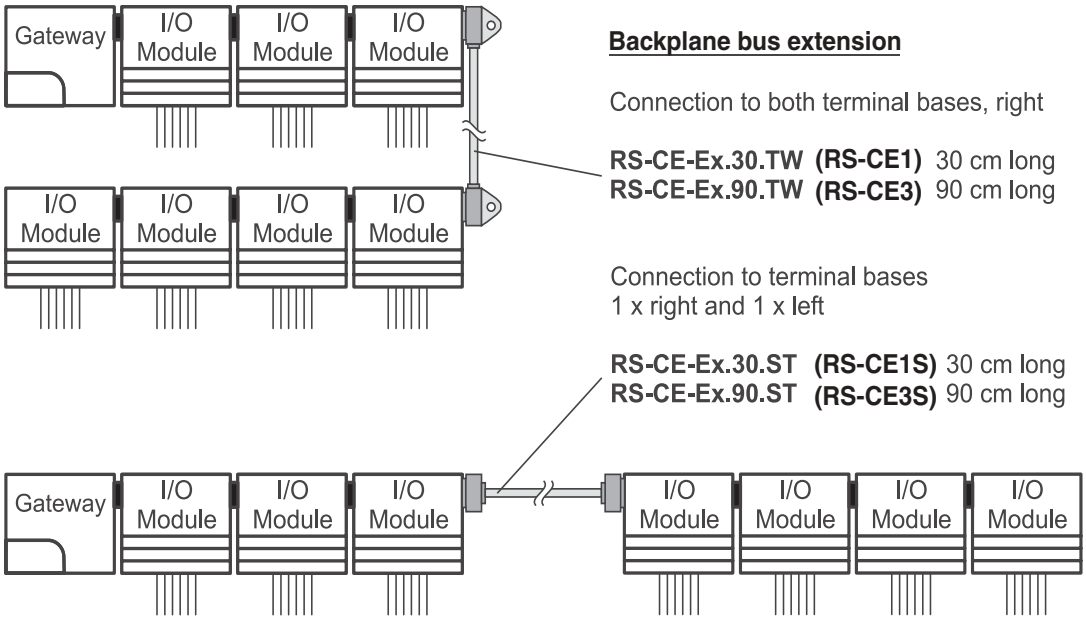

Backplane bus extension

Connection to both terminal bases, right

RS-CE-Ex.30.TW (RS-CE1) 30 cm long
RS-CE-Ex.90.TW (RS-CE3) 90 cm long

Connection to terminal bases
1 x right and 1 x left

RS-CE-Ex.30.ST (RS-CE1S) 30 cm long
RS-CE-Ex.90.ST (RS-CE3S) 90 cm long

Date of Issue 20.11.98

Subject to reasonable modifications due to technical advances. Copyright Pepperl+Fuchs, Printed in Germany